Biogas - energy from anaerobic digestion

by *Detlef Riesel*

GERMANY

1. Introduction

To protect the dwindling fossil energy resources and to stop climate change a gradual move to renewable energy supply will be necessary in the coming decades. In the last few years there is a worldwide shift towards renewable energies and Germany is one of the top performers. The German Government passed there energy concept with the key message to phase-out of nuclear power and to move forward with renewable energies. This is being seen as a milestone for economic and social development in Germany. The cornerstones are:

- phase-out of nuclear power till 2022,
- dynamic development of renewable energies in all sectors,
- rapid expansion and modernisation of the electrical grid and
- improvement of energy efficiency, especially by energetic building renovation and power-saving technologies.

Bioenergy is an important part of the renewable energy mix and biogas has a big share in power production. In 2010 13,300 GWh electricity were produced from biogas that equals 2.2% of the German final energy consumption. With this amount the electricity consumption of approx. 3.7 million households can be secured.

2. Production of biogas

2.1. Biogas production

Biogas occurs widely in nature. It forms wherever organic material accrues under exclusion of oxygen (called anaerobic digestion - AD), for example in swamps and bogs, on the bottom of lakes or in the stomach of ruminants. The organic matter is almost entirely converted into biogas under these conditions. Biogas can however also be produced systematically from organic matter in a biogas plant (anaerobic digester) with the help of various bacteria. The yield and composition of the biogas and the methane content varies according to the material or mixture of materials used. One cubic meter methane has the energy content of 9.97 kWh.

2.2. Input material

For the production of biogas a variety of organic matter can be used. In farm-based plants the main substrates are primarily livestock excrements (slurry and manure) and specifically grown energy crops. The use of slurry and manure is not only of great importance from the perspective of economy and climate change (emission reduction), but this also has a process-stabilizing effect.

Energy crops, like maize, sorghum, grass, sunflower, are grown for this purpose and give especially high yields of biogas. The crops are mostly chopped and made into silage. Currently maize is the most efficient biogas substrate and it has a share of 76% on energy crops used for biogas production. There is a wide variety of crops that are useable, important is the local availability, stable quantity and quality, but also cost-efficient production.

In addition to renewable raw materials and agricultural wastes and residues, there are other substrates for biogas production available, such as residues from the food- and feed industry (e.g. pulp or draff), food waste, landscaping materials or biodegradable waste.

A large part of the substrates are obtained in agriculture, therefore here is also the highest potential for biogas production.

2.3. Process technology

Farm-based biogas plants consist of storage and mixing tank, substrate insertion, digester, where the actual fermentation process takes place, digestate storage and biogas utilisation.

Slurry and co-substrates are stored temporarily and crushed, diluted or mixed in the slurry store if necessary. The heated digester, also known as fermenter, is the cornerstone of the plant. For fermentation to be effective it needs to be gas- and watertight but also has to shut out all light. A stirring device ensures that the substrate stays well-mixed and homogenous and that bacteria and substrate are in close contact with each other. After the substrate has fully degraded, it is pumped into the digestate storage and can then be used as fertiliser. The produced biogas is first of all cleaned and desulphurised and then flows into a storage container and its respective uses.

Beside the key elements there are other components possible, for example if substrates that could potentially spread epidemics (abattoir or food waste) are added to the fermentation process, then these substrates have to be made hygienic and heated at over 70°C for at least an hour to kill off the germs.

The digested substrate, usually named digestate, is a valuable soil fertilizer, rich in nitrogen, phosphorus, potassium and micronutrients. The digestate can be applied on fields with the usual manure spreader. Compared to raw manure, digestate has improved fertilizer efficiency, C/N ratio and has significantly reduced odors.

Biogas plants differ according to their chosen substrate, the technology and even the process temperature. Most biogas plants currently operating in Germany are based on the principle of wet fermentation. This means the use of solid substances (like energy crops) is only possible to a limited extend. The dry matter content has to be <15%. In contrast, substrates are used in dry fermentation are neither pump able nor capable of flowing. Dry fermentation is an option for farms without livestock excrements and bio waste digestion facilities.

Fermenters with a process temperature of between 32 – 42°C are called mesophile plants, those between 50 – 57°C are known as thermophile ones. Another option is to split the fermentation into two phases and by this to establish more ideal conditions for the respective micro organism. Single-stage plants carry out all four stages in one fermenter; two-stage plants separate the first two stages from the following ones.

In Germany the method of choice is using wet fermentation technology at mesophile temperatures in a single-stage fermenter.

2.4. Fermentation process

The fermentation process in the fermenter is nevertheless fundamentally the same. This actual process involves the complex interaction of various microorganisms and takes place in basically four separate biological stages. The first stage is the liquefaction phase (hydrolysis), which splits long-chain organic compounds into simpler organic compounds. The products of the hydrolysis are subsequently metabolized in the acidification phase (acidogenesis) and broken down into short-chain fatty acids. Acetate, hydrogen and carbon dioxide are also created and act as initial products

for methane formation. In the acetic acid phase (acetogenesis) the organic acids and alcohols are broken down into acetic acids, hydrogen and carbon dioxide. These products act as a substrate for methanogenic microorganism. In the fourth and final phase, during methane is formed (methanogenesis), the products from the previous phases are converted into methane by methanogenic microorganism (archaea).

The end product of fermentation is the combustible biogas that is mainly composed as follows:

- 50-75% methane (CH_4)
- 25-45% carbon dioxide (CO_2)
- 2-7% water (H_2O)
- <2% oxygen (O_2)
- <2% nitrogen (N_2)
- <1% ammonia (NH_3)
- <1% hydrogen sulphide (H_2S)
- <2% trace gases

3. Biogas Utilisation

Biogas has various utilisations. Generally it can be used for decentralised power and heat generation, for heat production by direct combustion, electricity production by fuel cells or micro-turbines or as vehicle fuel. Biogas is storable and because of this it is useable independent from the place of production. Energy from biogas is also independent from daytime, season and weather.

3.1. Electricity and heat

In Germany biogas is predominantly converted into electricity in combustion engines that in turn drive a generator. Due to feed-in tariffs in Germany and many other countries the produced electricity is sold to the electric supply company. CHP plants use either Gas-Otto engines or spark-ignition engines.

In addition to electrical energy in CHP operation is approximately the same amount of heat energy produced. The biogas plant itself requires about. 25% of the waste heat for heating the fermenter. Surplus heat is often used for the living and working quarters of the farm. A high degree of efficiency can be reached if heat is sold and brought to consumers through heat networks. This can be residential, commercial and municipal facilities, such as swimming pools and hospitals.

In principle, biogas is also suitable as an energy source for fuel cells, Stirling engines and micro turbines. Advantages of these newer technologies, such as higher efficiencies are currently still overshadowed by higher costs. Another possibility for the efficient use offers the ORC-technology. Hereby the waste heat produces additional electricity.

3.2. Biomethane and fuel

In recent years the upgrading of biogas and feeding into the natural gas network has increasingly established. By the end of 2010 in Germany 52 biomethane plants produced around 280 million standard cubic meters gas, which is about 0.4% of Germany's natural gas consumption. The purified

biogas, now 'called biomethane, can be transported through the existing natural gas grid to locations with high, year round heat demand.

Biomethane as a fuel can be used in CNG vehicles. Compared to conventional fuels bio-methane is characterized by lesser carbon dioxide emissions. In Europe in Sweden and Switzerland biomethane is used as fuel for many years in cars, buses, trucks and rail cars.

4. Biogas in Germany

4.1. Overview

By the end of 2010 5905 mostly farm-based biogas plants produced approximately 2300 MW electricity. Even if the technology is well known for some time the rapid development started about 15 to 20 years ago. And there has been an enormous growth when the “renewable Energy Sources Act” came into force in 2000. The number of plants has grown in the last ten years almost 5 times and installed electrical capacity has grown 24 times. By the end of this year the power production from biogas will equal the production of 4 average modern coal power plants.

Besides the increasing number of biogas plants there is also a growing number of upgrading facilities for biomethane production. By the end of 2011 are more than 100 plants expected with a processing capacity of 68,000 standard cubic meters per hour.

In Germany main input substrates are livestock excrements (mass referred 45%) and energy crops (mass referred 46%). Currently about 800,000 ha are grown with energy crops for biogas. Main culture is maize with a share of 76% on energy crops. Even if maize has the highest efficiency for biogas production, there are some environmental and social problems with the growing number of maize fields. Steps forward are special energy crop systems with crop rotation, establishment of new crops for this purpose and other measurements. R&D in this field is intensive to ensure energy crop production can be expanded in an ecologically and economically sustainable matter.

From an economic standpoint it is mostly important to control the cost during construction and operation. The most important factor is the substrate costs. With the growing number of plants and higher demand of substrates this will be the critical factor for survival of biogas plants. Another factor is the highest use of the produced gas and a heat concept is an important part of it.

For the future it is necessary to find the right balance and make biogas production sustainable.

4.2. Regulatory framework

The most important legal instrument in Germany to support electricity production from renewable sources is the Renewable Energy Sources Act (EEG), which first came into force 2000. Since than the act has been amended 2004 and 2009 and the next amendment will come in force 2012. The EEG regulates the preferential connection of plants that produce electricity from renewable energy sources. It defines payment rates for every kilowatt hour that is fed into the public grid. The basic payments differ according to the type of source, the conversion technology and the capacity of the plant. According to the German Federal Ministry for the Environment, Nature Conservation and Nuclear Safety 47 countries use the EEG as model for their own legislation to promote renewable energies.

For the construction and operation of biogas plants and the spreading of the digestate a variety of laws and regulations are to follow. These requirements include the planning, construction, water, nature protection and waste legislation, as are the requirements of pollution control, fertilizer and relevant food hygiene legislation.

5. Conclusion and outlook

Biogas production is a natural process which is systematically done in biogas plants. A large variety of organic input materials are useable. The whole process is technically proven. The Fermentation process consists of four stages. Microorganisms are producing biogas in an anaerobic milieu at mesophile temperature. The produced raw biogas needs to be cleaned and upgraded to use it in various utilisation possibilities (electricity, heat, fuel). A large amount of biogas can be supplied by agriculture. Biogas production is regulated by many laws and regulations and economic success depends not only on societies support, but also on cost optimisation and highest use of the product.

Biogas production is a chance for farmers to generate additional income and there are good potentials in Europe. In Germany the usage of slurry in smaller plants will increase and larger plants are preferred constructed for biomethane production. Efficiency and sustainability are the key elements for crop cultivation, biogas production and utilisation for the future**.** Despite all achievements so far extensive efforts have to be made in all segments, R&D, politics and administration, agriculture and industry, to make biogas a further success

Fig. 1 - Scheme of processes in a farm-based biogas plant

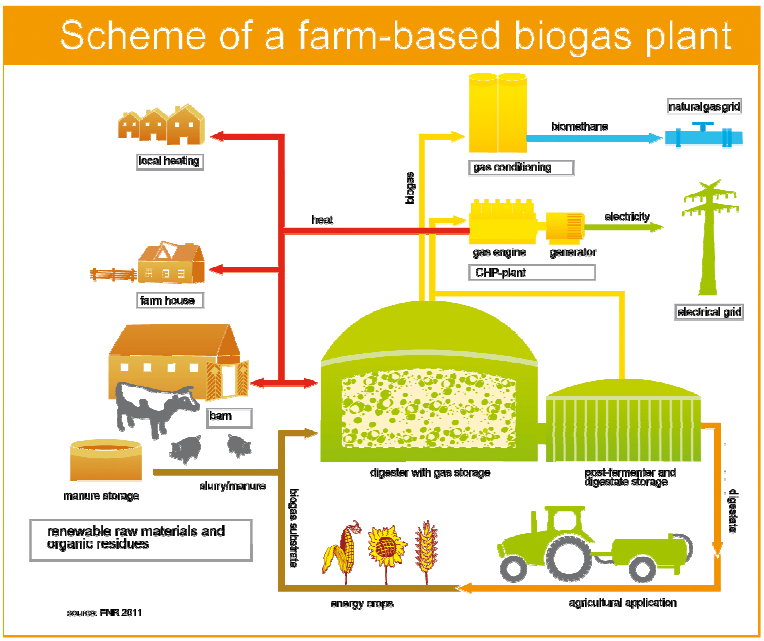

Fig.2 – Simplified diagram of how organic matter is broken down during biogas production

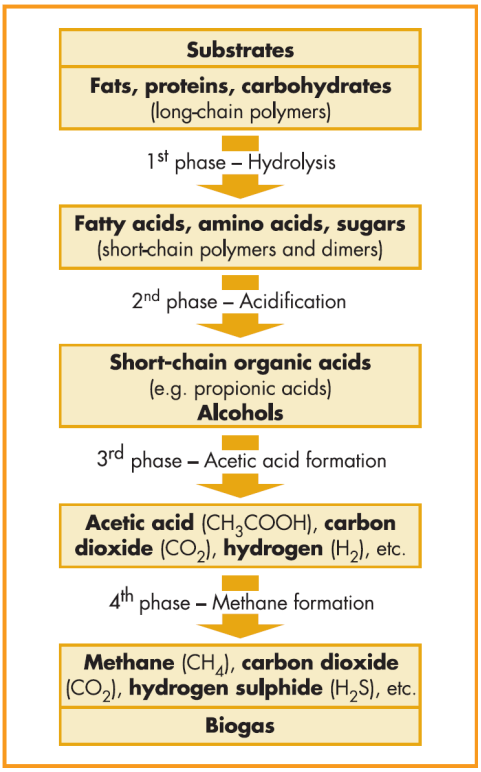

Fig. 3 - Various utilisation of biogas

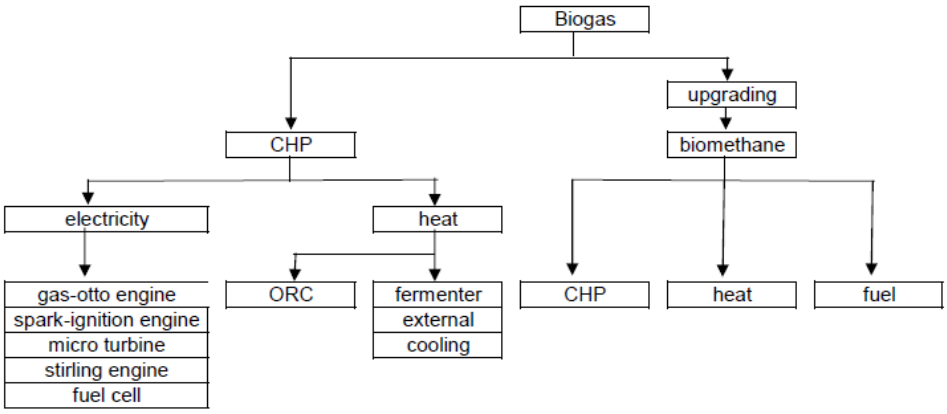

Fig. 4 - Number of biogas plant and their total installed electrical capacity in Germany