Giuseppe Pellizzi Prize

CLUB OF BOLOGNA

CLUB OF BOLOGNA

FEDER UNACOMA

Italian Agricultural Machinery Manufacturers Federation

eima 2021 international

A GREAT EIMA, AS USUAL

The Digital Preview (EDP) 11/15 novembre 2020

The Event 3/7 febbraio 2021

DESIGN, DEVELOPMENT AND EVALUATION OF A VARIABLE RATE APPLICATOR FOR REAL TIME APPLICATION OF FERTILIZER

Dissertation presented to Punjab Agricultural University, Ludhiana, Punjab, INDIA

Hasan Mirzakhaninafchi

Department of Farm Machinery and Power Engineering, College of Agricultural Engineering and Technology, Punjab Agricultural University, Ludhiana, INDIA

✉: hasan_Mirzakhani@yahoo.com ☎: +91-9599363066 🖷: fax number

1 Introduction

- Agriculture sector has remained backbone of the Indian economy and presently accounts for 16 % of the country's GDP (Economic survey, 2018). It engages 54.6% of the India's population in agriculture and allied activities (DOAC&FW, 2016).
- The greater challenge in agriculture production system is to increase output in a sustainable manner that minimizes environmental impact and at the same time provides better returns to farmers.
- Fertilizer is one of the major input for agriculture production system and also a major input cost.
- India is the second largest producer (16.36Mt) and consumer (27.40Mt) of fertilizer in the world with an average consumption of 129.8 kg/ha. (IFFCO, 2013-14)
- Uniform application of fertilizers, can result in under fertilization of some parts of a field and over fertilization in other parts.
- Conventional application of chemical fertilizer to the crops often results in very low yield at low fertility sites, whereas at high fertility sites lodging of crop occurs due to increased biomass which is undesirable as it is very difficult to harvest.
- **Variable rate fertilizer application** has had the prospective to catch improved fertilizers use efficiency, increase income, and reduce environmental issues.

Research Gap

- Suitable real time variable rate applicator for fertilizer on the basis of plant requirement is not available in India.
- The currently available sensor based real time variable rate fertilizer application technologies used in different countries are not suitable for India due to small land holdings and high cost of technology.

Thesis Statement

- Affordable solution complimentary to existing seed drills will be key for VRT use in India.

2 Materials and Methods

Design approach

- There should be sensing unit to record the plant health. The plant health needs to correlated with crop N status.
- The system should recognize the N requirement of plant based on its health status.
- A mechanism to vary fertilizer rate discharged by the applicator.
- Control unit (microcontroller) to receive the data from the sensor, process the data and send a signal to varying the fertilizer rate.
- It should precisely apply N for different field areas based on N requirement.

Functional components

The design involved main functional components

Electronic Unit: Sensor (Greenseeker), Raspberry-Pi, Ardino Uno, PWM valve

Hydraulic system: Tractor hydraulic system and Hydraulic motor

Mechanical System: Seed cum ferti-drill with Flutted roller mechanism

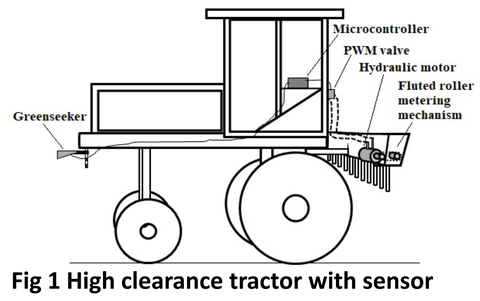

Fig 1 High clearance tractor with sensor

Methodology:

- The high clearance tractor with narrow rear tyre width (20 cm) was used as prime mower for mounting of Greenseeker in front of the tractor., Fig 1
- To select a suitable sensor for measurement of available nitrogen in the crop, information on different nitrogen measuring sensors was reviewed from literature followed by their performance comparison through different reported studies. Suitable nitrogen (N) sensor i.e. Greenseeker was selected on the basis of comparative analysis.
- The sensor was evaluated for NDVI value at heights of 40, 60, 80 and 100 cm from the crop canopy.
- For developing NDVI based variable rate applicator, fluted roller of existing seed drills was selected for converting it into variable rate applicator. The fluted roller fixed in the applicator had 11 flutes.
- For variable rate fertilizer application microcontroller was incorporated fot controlling the speed of fluted roller metering system and inturn to vary the fertilizer discharge based on the NDVI readings on-the-go.
- The rate of fertilizer was varied by varying the speed of fluted shaft via hydraulic motor which was fixed at the end of one side of the fluted roller shaft to rotate it.
- The fluted metering roller regulated the amount of fertilizer based upon its revolution controlled by hydraulic system.
- PWM valve was used to vary the rotational speed of hydraulic motor resulting variation in the rotation of metering mechanism shaft.
- The total operating width of the developed machine was 2.2 m and the spacing between two rows was 0.2 m.
- The machine was evaluated under lab and field conditions. Experimental data collected during field evaluation of variable rate. applicator was statistically analyzed for significance.

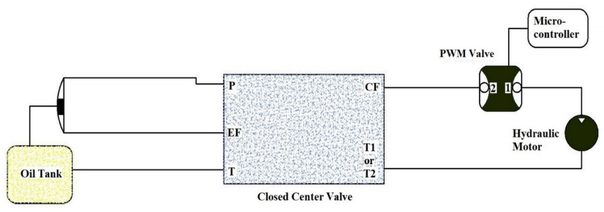

Fig 2 Hydraulic control system

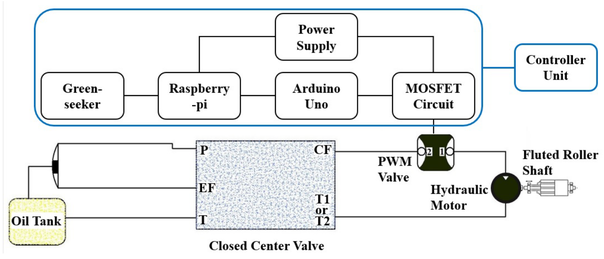

Fig 3 Integration of various systems developed for variable rate applicator

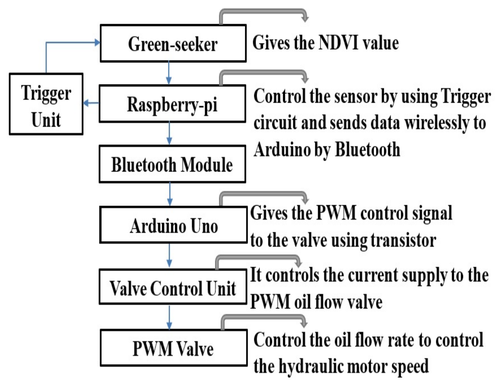

Fig 4 Block diagram of design specification

Working mechanism: The Greenseeker directly sends NDVI values to the Raspberry Pi 3 board which processes the received data based on an algorithm to extract only the useful values. It then transmits the data to the Arduino Uno which process the values and decides PWM command to be sent to the valve control circuit based on a coded algorithm. The valve control unit receives the PWM command and regulates the current supply to the oil flow valve with the help of a MOSFET accordingly. Varying the current supply to the oil flow valve control the opening and closing of the valve which in turn controls the hydraulic motor to dispense fertilizer.

Fig 5 Final prototype of variable rate applicator

Field evaluation : With the intention of evaluating the machine properly, the research field was divided three replications and each replication divided to four plots. The rate of fertilizer for these four plots varied from N1 = 75 kg/ha, N2 = 125 kg/ha, N3 = 175 kg/ha, N4 = 225 kg/ha for pady; and N1 = 0, N2 = 90 kg/ha, N3 = 180 kg/ha, N4 = 270 kg/ha

3 Results and Discussion

- At first crop growth stage (40 DAT), average values of NDVI for fertilizer rate N1 and N2 were same i.e. 0.5. But it was 0.53 and 0.54 for fertilizer rate N3 and N4 respectively.
- At the second crop growth stage (60 DAT), average values of NDVI were 0.51, 0.55, 0.61, and 0.66 for fertilizer rate N1, N2, N3 and N4 respectively. Similarly, at third crop growth stage (80 DAT), average values of NDVI were 0.50, 0.55, 0.62, and 0.69 for fertilizer rate N1, N2, N3 and N4 respectively.
- The effect of different fertilizer rate at different N levels on NDVI at 5 percent level of significance was significant at all growth stages of the crop.
- The effect of height on NDVI at 5 percent level of significance was non-significant, which means that the Greenseeker could be mounted on tractor at any suitable height between 40 to 100 cm from the crop canopy.
- The response time of the control system to apply fertilizer in the field was within the range of 6.45 to 7.81 s. Therefore, for efficient working of on-the-go fertilizer adjustment, the speed of tractor should be 2.0 km/h instead of 3 km/h.
- Applied fertilizer by using developed variable rate applicator at different growth stages of the rice crop at 40, 60 and 80 DAT indicated that when fertilizer rate is increasing from N1 to N4, NDVI is increasing from 0.49 to 0.69. Hence, shaft speed is decreasing from 27 to 7 rpm to apply the fertilizer rate 35.47 to 9.00 kg/ha respectively.
- Likewise, in wheat crop before second irrigation (60 DAS) When fertilizer rate is increasing from N1 to N4, NDVI is increasing from 0.54 to 0.79. Hence, shaft speed is decreasing from 21 to 0 rpm to apply the fertilizer rate 39.50 to 0.00 kg/ha respectively.
- In the plot with N4 level, total fertilizer applied by variable rate applicator was 122.32 kg/ha instead of 225 kg/ha as recommended by the university **resulting 45% saving in fertilizer application** by developed variable rate applicator.

4 Conclusions

A study was conducted to design and develop a variable rate fertilizer applicator to detect real time deficiency of nitrogen in the field and applying it as per requirement of the crop. The developed applicator varied the fertilizer dose as per crop health status indicated by NDVI. For crop heath monitoring, greenseeker due to cost effectiveness and comparative accuracy was most suitable sensor for integration with variable rate applicator.

Variation in fertilizer discharge among different delivery tubes was observed less with fluted roller type metering mechanism (CV ranging from 6.0 to 8.0 percent) as compared to the spinner disc type fertilizer applicator (having CV ranging from 20.0- 50.0 %).

The developed microcontroller system through PWM Valve precisely controlled the speed of fertilizer metering mechanism via hydraulic motor.

The response time of the control system to apply fertilizer in the field was within the range of 6.45 to 7.81 s.

Applied fertilizer by using developed variable rate applicator at different growth stages of the rice crop (40, 60 and 80 DAT) indicated that increase in fertilizer rate from 35.47 to 9.00 kg/ha, increased the NDVI from 0.49 to 0.69.

Total fertilizer applied by variable rate applicator was 122.32 kg/ha instead of 225 kg/ha as recommended by the university resulting 45% saving in fertilizer using by developed variable rate applicator.

5 References

- Sui R (2019) Performance Assessment of a Variable-Rate Fertilizer Applicator. J Agric Sci 11(2): p25.
- Tagarakis A C and Ketterings Q M (2018) Proximal sensor-based algorithm for variable rate nitrogen application in maize in northeast USA. Computers and Electronics Agric145:373-8.
- Wu C, Chen X, Han Y and Zhang S (2004) System modeling and control of automatically variable rate fertilizer applicator. IEEE Int Conference on Systems, Man and Cybemetics Inst Electrical and Electronics EngineersArticle ID 8292587 (doi: 10.1109/ICSMC.2004.1398350)

6 Final Remark(s)

A customized NDVI based variable rate fertilizer applicator was developed that can find wide acceptability in India and countries with large number of small and marginal farmers